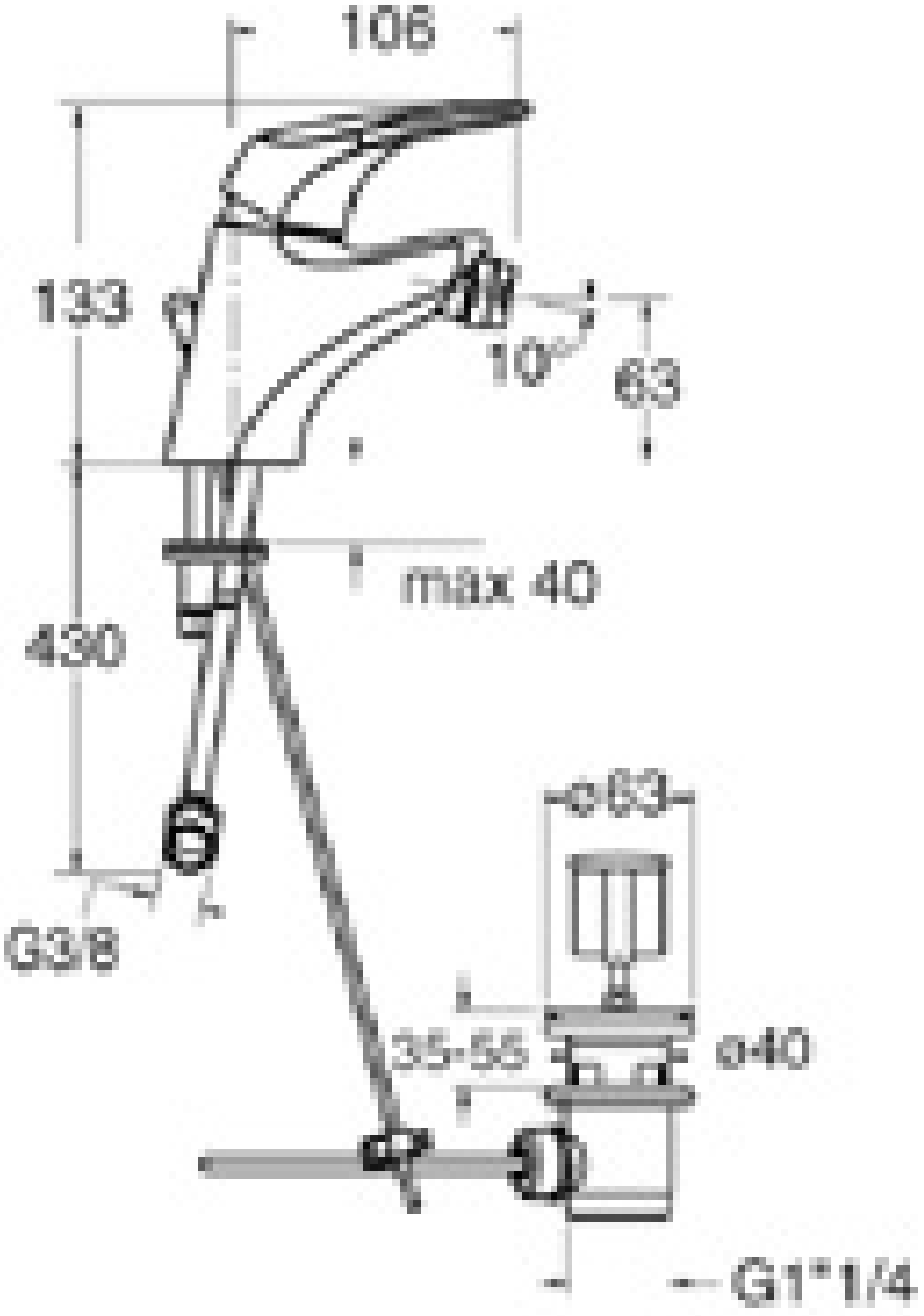
106
133
10°
63
max 40
430
ø63
G3/8
35-55
ø40
G1"1/4